Y301 MiniLink Series Serial I/O Modules User Manual

Applicable models: `Y301-110`, `Y301-200`, `Y301-020`.

- Specification | Technical Manual

Product Overview

MiniLink modules acquire switch states and control relay contacts over Modbus RTU. The three models provide one or two digital I/O channels.

Key features:

- RS485 standard; RS232 and TTL available on selected models
- 5-36 VDC power supply
- Dry and wet contact DI support
- Relay outputs for valves, lights, alarms, and actuators
- DIN-rail or screw mounting

Model Naming

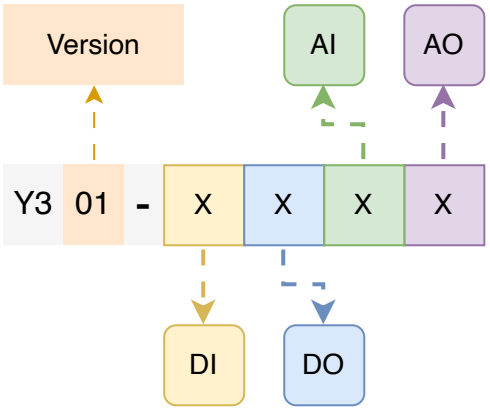

The positions after `Y301-` represent `DI / DO / AI / AO` channel counts on one module. `0` means no channels of that type. Models without AO use three characters for DI, DO, and AI; models with AO retain the fourth position.

Code	Channel count
`0` – `9`	0–9
`A`	10
`G`	16
`W`	32

Interface options are specified separately from the I/O code; use the configuration table in the relevant specification.

For example, `Y301-110` has 1 DI and 1 DO; `Y301-200` has 2 DI only; `Y301-020` has 2 DO only. All three models have no AI or AO.

Model Selection

Product	Model	DI	DO
	Y301-110	1	1
	Y301-200	2	0
	Y301-020	0	2

Default Parameters

Parameter	Default Value
Communication protocol	Modbus RTU
Device address	1
Baud rate	9600 bps
Data bits	8
Stop bits	1
Parity	None
Power supply	5-36 VDC

Note: Each RS485 device must have a unique address. Changes to address or baud rate require a restart. If communication fails, verify address, baud rate, A/B polarity, and GND connection.

Hardware Interfaces

Interface Area	Y301-110	Y301-200	Y301-020
Power	`+`, `−`	`+`, `−`	`+`, `−`
Communication	A, B, GND	A, B, GND	A, B, GND
DI Input	`DI`, `DI−COM`	`DI1`, `DI1−COM`, `DI2`, `DI2−COM`	None
DO Output	`DO`, `DO−COM`	None	`DO1`, `DO1−COM`, `DO2`, `DO2−COM`
Reload Button	Reload / Reset	Reload / Reset	Reload / Reset

DO terminals: MiniLink provides normally-open relay contact pairs. `DO–COM` is the relay common on Y301-110; Y301-020 has a separate `DO1–COM` / `DO2–COM` for each output. These are separate from the DI return terminals. No NC terminal is exposed on these models.

Wiring precautions:

- Power off before wiring
- Use shielded twisted pair for RS485; add 120Ω termination at both ends of long runs
- Add flyback diodes, RC snubbers, or surge protection for inductive loads
- Relay rating: 125 VAC / 0.5 A or 30 VDC / 2 A

Wire colours: positive (+) red, negative (-) black, RS485 A yellow, and RS485 B green. Identify each connection by its terminal label.

Power and Serial Wiring

Disconnect power before changing connections. The terminal drawings show electrical connections, not the physical order of the connector pins. Use only the serial interface fitted to the ordered module.

DC Power

Connect a 5-36 VDC supply to `+` and `–`.

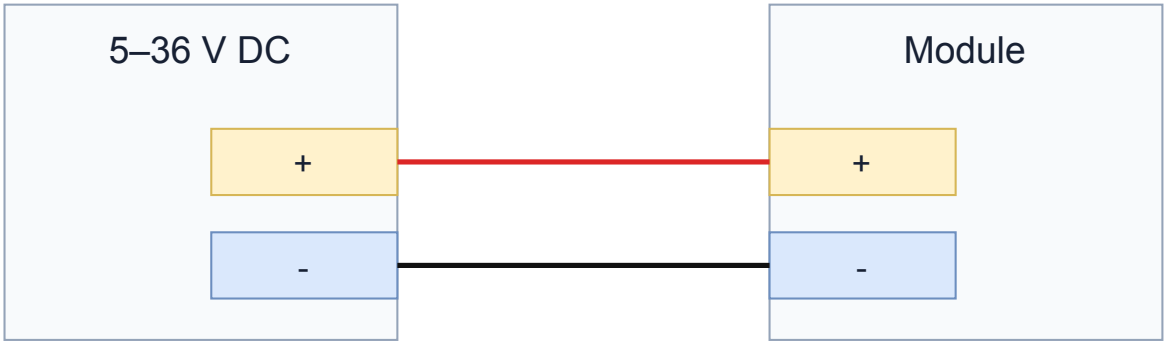

RS485

Connect host `A` to module `A`, `B` to `B`, and the signal reference to `GND`. On a combined label, `TX/A` is A and `RX/B` is B. Use a twisted pair for A/B, a line topology, and 120-ohm termination at the two physical ends of a long bus.

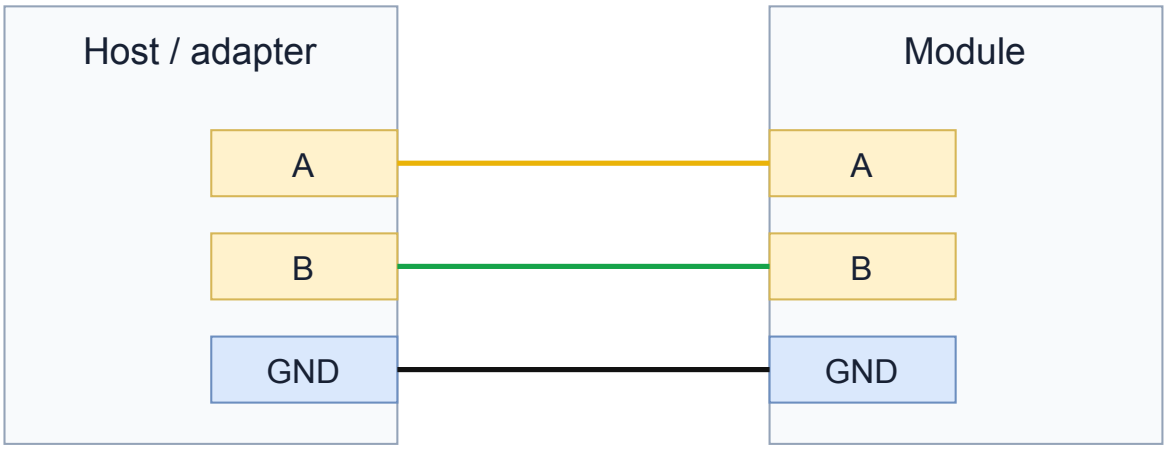

RS232 or TTL Variants

Cross `TX` and `RX` and connect `GND` to `GND`. Use an adapter with the same electrical interface as the module. Confirm the fitted TTL logic voltage before connection; RS232 and TTL require different adapters.

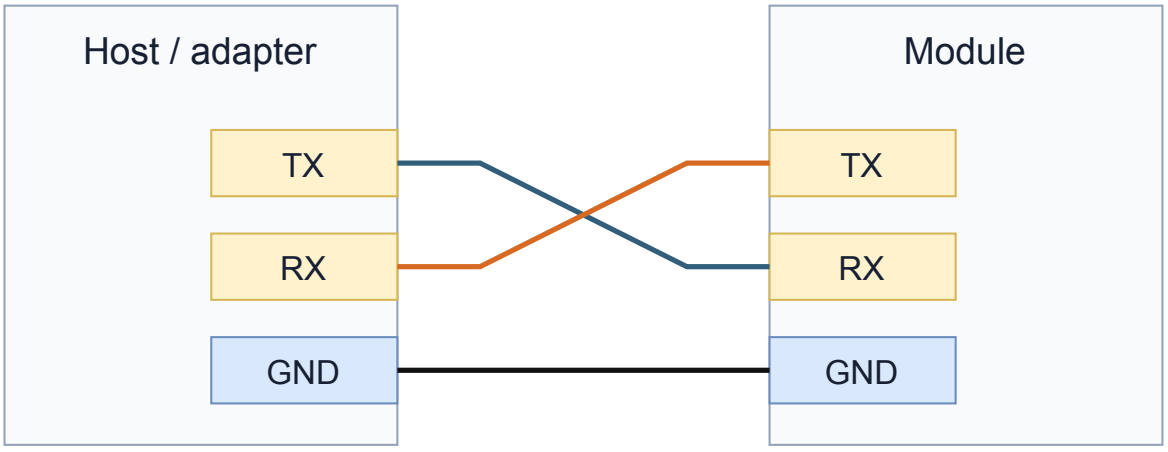

DI Wiring

The DI excitation / active signal range is **5-36 VDC**, matching module power. Y301-020 has no DI. Keep each input paired with its corresponding DI-COM.

The shared drawings show one channel. Use the corresponding terminal pair on the supplied model:

Diagram label	Y301-110	Y301-200
`DI`	`DI`	`DI1` or `DI2`
`DI-COM`	`DI-COM`	The matching `DI1-COM` or `DI2-COM`

Dry Contact Input

Connect supply positive through the contact to DI, and supply negative to its matching DI-COM. A passive rain-gauge contact connected only across DI and DI-COM does not complete this externally powered circuit. Repeat the same circuit for any additional input channel.

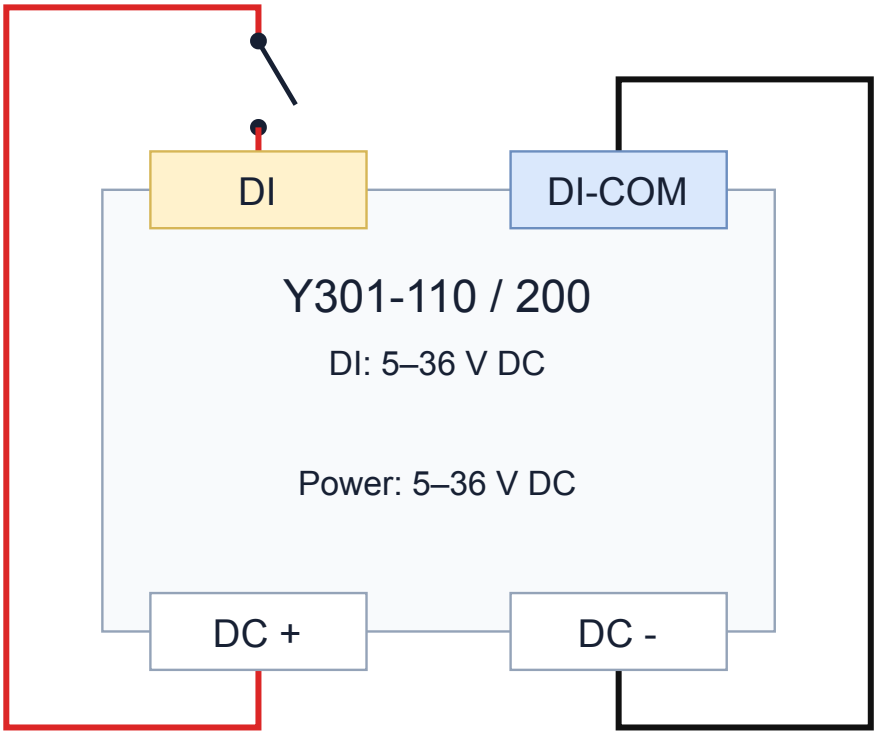

Wet Contact Input

Connect active signal positive to `DI` / `DI1` / `DI2` and signal negative to its corresponding DI-COM. Supply the module separately at its DC terminals. The drawings do not require a bond between the signal return and module power negative.

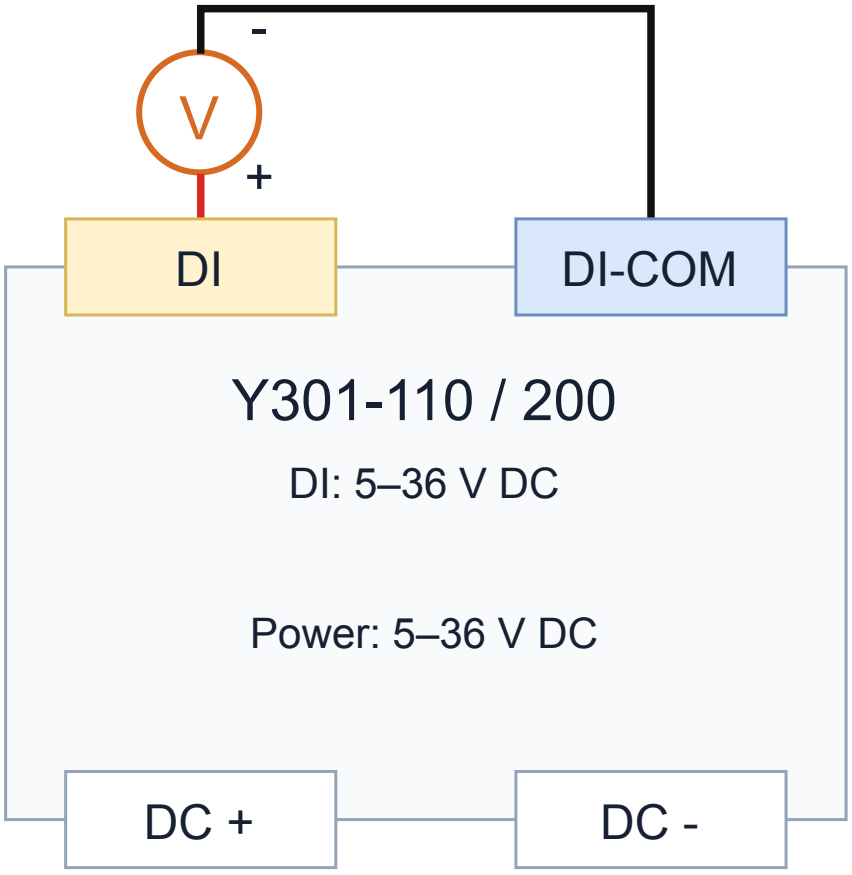

First Input Check

With output loads disconnected, use a known passive switch and hold it closed and open for about one second each. Check the DI LED and read DI1 with function `02`, starting address `0x0000`, quantity `1`. Read its pulse counter with function `03`, starting address `0x0500`, quantity `2` registers. Polling a short pulse can miss the instantaneous state; the counter records accepted edges.

DO Wiring Diagram

Applicable models: Y301-110 and Y301-020. The relay contacts switch an external load supply; they do not provide output voltage.

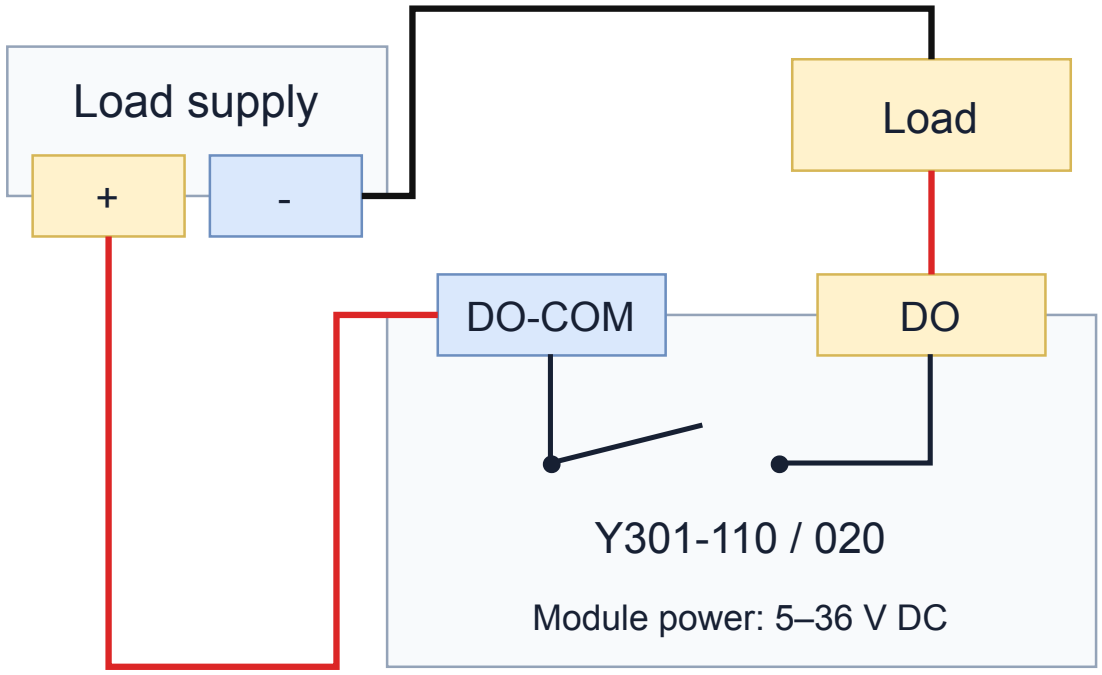

Use `DO` / `DO-COM` on Y301-110, or the selected `DOn` / `DOn-COM` pair on Y301-020. The drawing shows a normally-open contact and a separate low-voltage load supply. Keep within the relay rating of 125 VAC / 0.5 A or 30 VDC / 2 A. Provide suitable load protection and suppression for inductive loads.

- Manufacturer: Hunan YenGear Tech Co., Ltd.
- Email: hi@yengear.com
- Website: www.yengear.com