Y301-110/200/020 Serial I/O Modules Technical Manual

Y301-110	Y301-200	Y301-020
		

- Specification
- User Manual

Contents

1. Overview
2. Default Settings
    - DI Input Wiring
3. Modbus Register Map (Modbus Address Only)
4. Command Examples (CRC Included)
5. Parameter Configuration
6. Automation Rules
7. Troubleshooting

1. Overview

Y301-110, Y301-200, and Y301-020 use Modbus RTU for digital input monitoring and relay control.

Model	DI	DO	Description
Y301-110	1	1	Single input + single relay
Y301-200	2	0	Dual input monitoring
Y301-020	0	2	Dual relay control

Frame format: `[slave address][function code][data][CRC low][CRC high]`

Command examples use slave address `0x01`. Replace it with the configured device address and recalculate the CRC.

2. Default Settings

Parameter	Default
Slave address	1
Baud rate	9600 bps
Data bits	8
Stop bits	1
Parity	None
Pulse debounce	50 ms (`0x0042 = 50`)

2.1 DI Input Wiring

The Y301-110 and Y301-200 use a DI / DI-COM input pair for each fitted channel. One generic channel is shown for both models; use the terminal names in the table below.

DI input voltage: 5-36 VDC, matching the module power-supply range. This is the excitation voltage used with a passive dry contact, or the active signal voltage applied between DI and its corresponding DI-COM.

Channel	Signal positive / switched positive	Input return
Y301-200 DI1	`DI1`	`DI1-COM`
Y301-200 DI2	`DI2`	`DI2-COM`
Y301-110	`DI`	`DI-COM`

Y301-020 has no DI channels. The drawings show logical connections; they do not specify physical terminal positions.

> **Confirm the input circuit before wiring**
>
> Keep the DI excitation / active signal within 5-36 VDC. Follow the terminal labels on the supplied module; DI-COM is the input return, not the relay's DO common terminal. Power off before changing wiring.

Dry-Contact Input

In the circuit shown, the passive contact switches supply positive into DI. Connect the corresponding DI-COM to supply negative. The same 5-36 VDC source can power the module through its `+` and `-` power terminals and provide the DI excitation through the contact.

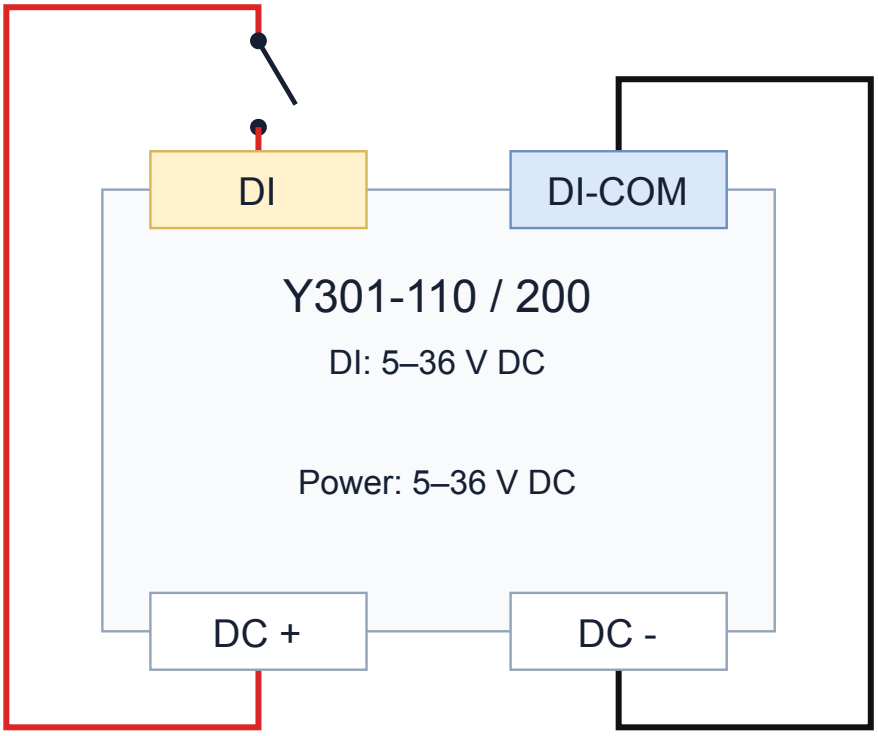

A contact connected only between DI and DI-COM does not complete the excitation circuit shown here. A mechanical rain-gauge reed contact must be used as the switch in the confirmed circuit, rather than treated as a powered signal source.

Wet-Contact Input

Connect each external signal's positive output to its DI terminal and the signal's negative return to the corresponding DI-COM. For Y301-200, repeat the connection separately for DI2 / DI2-COM. The module still needs its own DC power connection.

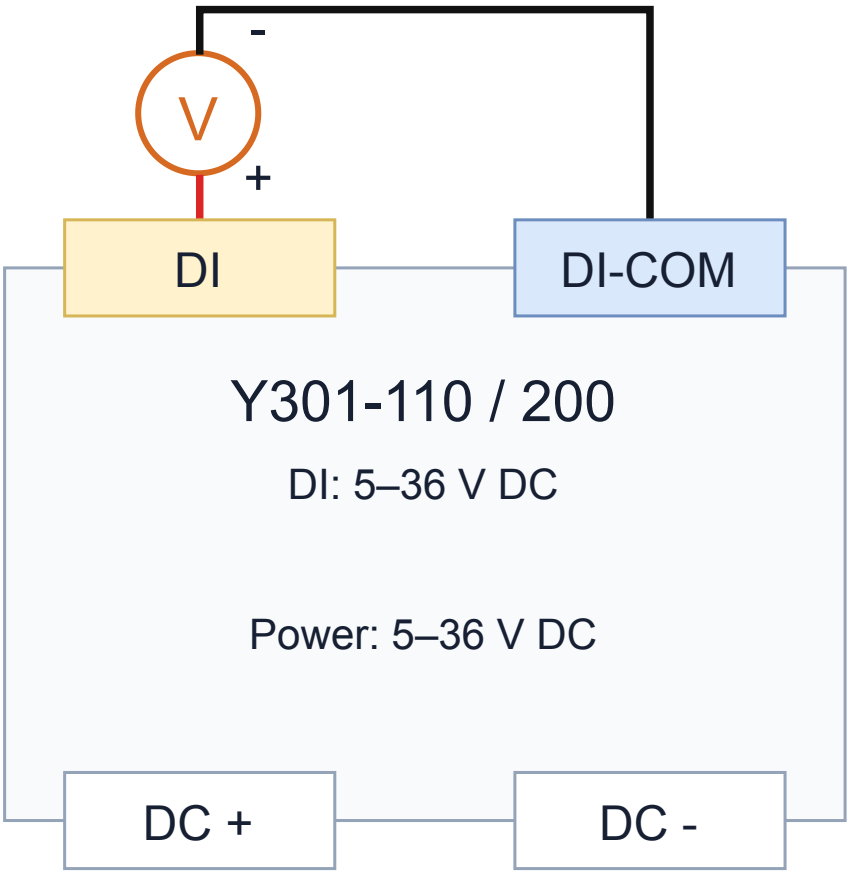

The wet-contact diagram does not add a connection between the signal return and module power negative. Confirm any required grounding or bonding for the supplied hardware and signal source before adding one. The active signal voltage between DI and DI-COM must be within 5-36 VDC.

First Input Check

After confirming the circuit and checking that the excitation voltage is within 5-36 VDC, power off, disconnect the rain gauge from any other logger, and isolate connected DO loads. For the dry-contact test, substitute a known passive switch in the contact position. Power on and hold it closed and open for about one second each. Read the DI state while holding each state, and compare the pulse counter before and after several complete cycles.

- DI1 state: function `0x02`, address `0x0000`, quantity `1`.
- DI1 count: function `0x03`, address `0x0500`, quantity `2` registers.
- Keep the initial debounce setting at `50 ms` for this slow test. Register `0x0041` selects the counting edge; `0x0042` sets counting debounce. Neither register

selects a dry-contact input mode.

A short rain-gauge pulse may be missed by status polling. Check the accumulated counter as well. If the slow switch test works but rain-gauge tips are missed, check the pulse timing and contact bounce before adjusting debounce. If a verified input signal still produces no state change, check terminal contact and compare with another module before concluding that DI is faulty.

3. Modbus Register Map (Modbus Address Only)

3.1 Digital Input (DI) - Function Code `0x02`

Channel	Modbus Address	Supported Models	R/W
DI1	`0x0000`	Y301-110, Y301-200	RO
DI2	`0x0001`	Y301-200	RO

Return value: `0` = inactive, `1` = active.

3.2 Digital Output (DO) - Function Code `0x01/0x05/0x0F`

Channel	Modbus Address	Supported Models	R/W
DO1	`0x0000`	Y301-110, Y301-020	RW
DO2	`0x0001`	Y301-020	RW

For function code `0x05`, write `0x0000` to open the NO contact or `0xFF00` to close it. Function code `0x0F` uses packed bits: `0` = open, `1` = closed.

3.3 Common Holding Registers - Function Code `0x03/0x06/0x10`

Holding-register data uses big-endian order. For a 32-bit value, the lower register address contains the high 16-bit word. Each register transmits its high byte first. Read or write both registers together.

Modbus Address	Parameter	Bytes	R/W	Range / Enum
`0x002A`	Runtime slave address	2	RO	0-255
`0x003E`	Slave address	2	RW	1-255
`0x003F`	Broadcast mode	2	RW	`0` = disabled; `1` = receive and respond; `2` = receive without response
`0x0041`	Pulse count edge	2	RW	`0` = falling; `1` = rising
`0x0042`	Pulse debounce (ms)	2	RW	5-255
`0x0055`	RTC Unix time	4	RW	uint32
`0x0057`	Baud rate	4	RW	600-230400
`0x0059`	Data bits	2	RW	8 or 9
`0x005A`	Stop bits	2	RW	1 or 2
`0x005B`	Parity	2	RW	`0` = none; `1` = odd; `2` = even

3.4 DI Pulse Counter Registers

Channel	Modbus Address	Bytes	R/W	Supported Models	Description
DI1 count	`0x0500` (`0x0500~0x0501`)	4	RW	Y301-110, Y301-200	Only `0` is allowed for write (clear)

Channel	Modbus Address	Bytes	R/W	Supported Models	Description
DI2 count	`0x0502` (`0x0502~0x0503`)	4	RW	Y301-200	Only `0` is allowed for write (clear)

Each count is a 32-bit unsigned integer (`uint32`). Use function code `0x03` to read two consecutive registers. For DI1:

```text
count = (register[0x0500] << 16) | register[0x0501]
```

For example, data bytes `00 01 00 02` represent `65538`. To clear a count, use `0x10` to write zero to both registers.

DI inputs sample at 100 Hz. Register `0x0042` sets the debounce interval in milliseconds. After a counted edge, signals within this interval do not generate another count. Select the interval to reject contact bounce without suppressing valid pulses.

3.5 Automation Rule Register Groups

Rule groups = DO * 2:

Model	DO Count	Rule Groups	Start Addresses
Y301-110	1	2	`0x0080`, `0x0088`
Y301-200	0	0	N/A
Y301-020	2	4	`0x0080`, `0x0088`, `0x0090`, `0x0098`

3.6 Reboot and Factory Reset Register

Write to `0x0800` with function code `0x06` to reboot or restore factory settings. This register is write-only.

Value	Operation
`0x5500`	Reboot
`0x0055` or `0x5555`	Restore factory settings and reboot

A factory reset restores the device parameters. Record the current settings before using it.

4. Command Examples (CRC Included)

4.1 Read Digital Inputs

Operation	Request	Supported Models
Read DI1	`01 02 00 00 00 01 B9 CA`	Y301-110, Y301-200
Read DI2	`01 02 00 01 00 01 E8 0A`	Y301-200
Read DI1~DI2 in one shot	`01 02 00 00 00 02 F9 CB`	Y301-200

4.2 Read Digital Output Status

Operation	Request	Supported Models
Read DO1	`01 01 00 00 00 01 FD CA`	Y301-110, Y301-020
Read DO2	`01 01 00 01 00 01 AC 0A`	Y301-020
Read DO1~DO2 in one shot	`01 01 00 00 00 02 BD CB`	Y301-020

4.3 Control Digital Outputs

Operation	Request	Supported Models
Open DO1	`01 05 00 00 00 00 CD CA`	Y301-110, Y301-020
Close DO1	`01 05 00 00 FF 00 8C 3A`	Y301-110, Y301-020

Operation	Request	Supported Models
Open DO2	`01 05 00 01 00 00 9C 0A`	Y301-020
Close DO2	`01 05 00 01 FF 00 DD FA`	Y301-020

Multi-channel control (`0x0F`):

Operation	Request	Supported Models
Close DO1 and DO2 together	`01 0F 00 00 00 02 01 03 9E 96`	Y301-020
Open DO1 and DO2 together	`01 0F 00 00 00 02 01 00 DE 97`	Y301-020

4.4 Parameter Read/Write

Operation	Request
Read slave address (`0x003E`)	`01 03 00 3E 00 01 E5 C6`
Write slave address = 5	`01 06 00 3E 00 05 28 05`
Read baud rate (`0x0057` , 2 regs)	`01 03 00 57 00 02 75 DB`
Write baud rate = 115200 (`0x0001C200`)	`01 10 00 57 00 02 04 00 01 C2 00 B7 D5`
Write `8N1` (`0x0059~0x005B`)	`01 10 00 59 00 03 06 00 08 00 01 00 00 85 EF`

4.5 DI Pulse Counter Read/Write

Operation	Request	Supported Models
Read DI1 count (`0x0500` , 2 regs)	`01 03 05 00 00 02 C4 C7`	Y301-110, Y301-200

Operation	Request	Supported Models
Read DI2 count (`0x0502` , 2 regs)	`01 03 05 02 00 02 65 07`	Y301-200
Clear DI1 count (write 0)	`01 10 05 00 00 02 04 00 00 00 00 CC FF`	Y301-110, Y301-200

5. Parameter Configuration

5.1 Serial Settings

- Baud rate is a 32-bit value at `0x0057` , use `0x10` to write 2 registers.
- Data/stop/parity are located at `0x0059~0x005B` .
- Changing serial parameters or slave address requires reboot. Write `0x5500` to `0x0800` with function code `0x06` , then reconnect using the new settings.
- Other configuration parameters take effect immediately after they are written.

5.2 RTC and Scheduled Rules

Write the current Unix time in seconds to `0x0055~0x0056` before using modes 7, 8, or 9. Set the time after each reboot on devices without the optional hardware RTC.

5.3 Pulse Counting Edge

Set `0x0041` to `0` for falling-edge counting or `1` for rising-edge counting.

6. Automation Rules

Y301-110 supports `DI -> DO` local automation (`1DI + 1DO`).
Y301-200 has no DO and no output automation rules. Y301-020 supports output rules driven by Modbus commands or time; it has no DI for input-triggered rules.

6.1 Automation Register Map

Rules start at address `0x0080`. Each rule uses 8 registers (16 bytes).

Offset	Field	Description
`+0`	Mode	Rule mode number
`+1`	Action	Mode-specific action
`+2`	DO index	Target relay, starting from 1
`+3`	Trigger index	Source DI, starting from 1; `0` for modes 2-5 and 7-9
`+4–5`	Parameter 1	Mode-dependent, 32-bit
`+6–7`	Parameter 2	Mode-dependent, 32-bit

6.2 Rule Modes

Mode	Name	Action / Parameters	Applicable Models
0	Disabled	Disable this rule	Y301-110, Y301-020
1	DI follow	`0` = inverse, `1` = forward; select the source DI	Y301-110
2	Pulse output	`0` = normally open, `1` = normally closed; parameter 1 = pulse duration (ms)	Y301-110, Y301-020
3	Delayed control	`0` = delay opening commands, `1` = delay closing commands, `2` = delay both; parameter 1 = delay (ms)	Y301-110, Y301-020
4	Timed change after reboot	`0` = open, `1` = close, `2` = toggle; parameter 1 = delay after reboot (ms)	Y301-110, Y301-020

Mode	Name	Action / Parameters	Applicable Models
5	Cyclic change	`0` = open first, `1` = close first; parameter 1 = open duration, parameter 2 = closed duration (ms)	Y301-110, Y301-020
6	Button input	`0` = open, `1` = close, `2` = toggle; select DI; parameter 1 = minimum active duration (ms)	Y301-110
7	Scheduled once	`0` = open, `1` = close, `2` = toggle; parameter 1 = Unix timestamp (s)	Y301-110, Y301-020
8	Scheduled repeating	`0` = open, `1` = close, `2` = toggle; parameter 1 = Unix timestamp (s), parameter 2 = repeat interval (ms)	Y301-110, Y301-020
9	Daily schedule	`0` = open, `1` = close, `2` = toggle; parameter 1 = seconds since the start of the day (`0–86399`)	Y301-110, Y301-020
14	Delayed DI follow	`0` = inverse, `1` = forward; select DI; parameter 1 = follow delay (ms)	Y301-110
15 / 16 / 17	Logic AND / OR / XOR	Parameter 1 = DO mask, parameter 2 = DI mask; trigger an action or hold an output state	Y301-110 (DI/DO conditions), Y301-020 (DO conditions)

Modes 10-13 require AI inputs. Y301-110, Y301-200, and Y301-020 have no AI inputs.

For logic modes, bit 0 selects channel 1 and bit 1 selects channel 2. Use channels present on the model. Select the logic action in the configuration tool: open, close, or toggle on a trigger, or hold the output open or closed while the condition is true.

The minimum delay or interval is 10 ms in modes 3, 4, 5, 8, and 14. In button mode, the action triggers when the DI returns inactive after meeting the minimum active duration. When rules conflict, the later rule takes precedence.

Mode 2 responds to a Modbus output-control command: configuring the rule alone does not issue the pulse. Mode 3 delays an output-control command; it is distinct from mode 14, which follows a DI change after a delay.

6.3 Rule Command Examples (`Y301–110`)

- **Case 1: DI Follow (Mode 1): DO1 follows DI1**

Field	Value	Description
Mode	`0x0001`	DI follow
Action	`0x0001`	Forward follow
DO index	`0x0001`	DO1
DI index	`0x0001`	DI1
Parameter 1	`0x00000000`	Not used
Parameter 2	`0x00000000`	Not used

```text
01 10 00 80 00 08 10 00 01 00 01 00 01 00 01 00 00 00 00 00 00 00 00
CC FE
```

- **Case 2: Pulse Output (Mode 2): DO1 normally open, auto-recover after 500 ms close**

Field	Value	Description
Mode	`0x0002`	Pulse output
Action	`0x0000`	Normally open
DO index	`0x0001`	DO1
DI index	`0x0000`	Not used
Parameter 1	`0x000001F4`	500 ms
Parameter 2	`0x00000000`	Not used

```text
01 10 00 80 00 08 10 00 02 00 00 00 01 00 00 00 00 01 F4 00 00 00 00
30 EA
```

7. Troubleshooting

Symptom	Cause	Solution
No response	Wrong address, serial settings, or wiring	Check the configured slave address, baud rate, data bits, parity, stop bits, and RS485 wiring. Broadcast mode is disabled by default; address `0` is not a reliable response test.
CRC error	Wiring issue or interference	Check RS485 polarity and add termination resistors
DO does not switch	Load exceeds rating	Reduce the load and verify contact ratings
DI always reads 0	Missing excitation, incorrect wiring, or input signal outside the permitted limits	Follow the confirmed DI circuit in Section 2.1; check input polarity, return connection, excitation voltage, and terminal contact.

LED Indicators

LED	Status	Meaning
POWER	Solid on	Power is normal
TX	Flashing	Data is being transmitted
RX	Flashing	Data is being received

- **Manufacturer**: Hunan YenGear Tech Co., Ltd.
- **Email**: hi@yengear.com
- **Website**: www.yengear.com